RDP Customer Document

Technical Manual

TWO CHANNEL DC AMPLIFIER MODULE TYPE 611

Doc. Ref CD2001T

This manual applies to units of mod status 1 ONWARDS

ISO 9001:2015 Quality Management FM 13141

UK CA CE

Affirmed by Declaration of Conformity

USA & Canada

RDP Electrosense Inc.

2216 Pottstown Pike
Pottstown, PA 19465
U.S.A.
Tel (610) 469-0850
Fax (610) 469-0852
E-mail info@rdpe.com
www.rdpe.com

All other countries

RDP Electronics Ltd

Grove Street, Heath Town,
Wolverhampton, WV10 0PY
United Kingdom
Tel: +44 (0) 1902 457512
Fax: +44 (0) 1902 452000
E-mail: sales@rdpe.com
www.rdpe.com

Index

1.1 BEFORE POWERING-UP CHECK... 4
1.2 Information on Conformity to EC Directives. 4

2. CONNECTION DETAILS 5

2.1 With M600 Backplane 5
2.2 Output connections via front panel jack plug....6
2.3 Without 600 Backplane 6
2.4 Connections to Strain Gauge Transducers 7
2.5 Connections for Amplified Voltage Output Transducers 8
2.6 Connections for Potentiometric Transducers 8
2.7 Connections for 3 wire 4 to 20mA Transmitters 9
2.8 Connections for 2 wire 4 to 20mA Transmitters 9

3. CONTROLS 11

3.1 Excitation Voltage....11
3.2 Excitation Check (SW1) 11
3.3 Remote Sense Selection....11
3.4 Gain Range Switches (SW3 and SW5)....12
3.5 Fine Gain Potentiometers (RV4 & RV7)....12
3.6 Zero Range Switches (SW4 & SW6) 12
3.7 Fine Zero Potentiometers (RV3 & RV6) 12
3.8 Output Voltage/Current Selectors 12
3.9 Shunt Calibration Switch (SW2) (for Bridge Transducers)....13
3.10 Filter Switches 13
3.11 Channel Number (Address) Switch (SW7) 13

4. SETTING-UP PROCEDURE 13

5. SHUNT CALIBRATION....14

5.1 A Calibration Check....14
5.2 A Secondary Calibration....14

6. A-B OR A+B MEASUREMENT 14

7. SPECIFICATION....15

8. ISOLATED OUTPUT OPTION....15

8.1 Specification for isolated output option 16

9. SAMPLE/HOLD OPTION....16

10. WARRANTY AND SERVICE 18

Table of Figures

Fig. 1 Front Panel....5

Fig. 2 Control Locations 10

1. INTRODUCTION

The 611 unit is a plug-in Eurocard module with two channels of transducer energisation and signal conditioning for use with both low and high sensitivity transducers. Typical low sensitivity transducers are full strain gauge bridge load cells and pressure transducers. Typical high sensitivity transducers are 4-20mA transmitters, dc-dc LVDTs such as the RDP DCT range, RDP Sensagap transducers, etc.

There is a comprehensive variable voltage transducer energisation with remote sense facility. The gain can be varied over a wide range and there is output signal suppression of up to ± full range.

Front panel controls include fine gain, zero and excitation with a push-button shunt calibration. Both channel output signals are accessible via a 3-pole jack.

Further on-board controls allow selection of ±15v excitation, voltage or current (4-20mA) output and noise reduction filter.

A channel address switch is provided for use with the 635/6/650 monitor systems and isolated output or output hold options may be fitted.

Transducer and output connections are made via a 32-way DIN 41612 plug or, when used with the RDP backplane system, via circular DIN connectors.

1.1 BEFORE POWERING-UP CHECK...

1	The supply voltage is correct to suit the 631/632 unit fitted.
2	The various plug-in modules are in the correct positions in the housing.
3	The input and output plugs are in the correct sockets. Note that on the housing back-plane all input sockets and all output sockets are of the same type.
4	Before connecting a transducer, ensure that the correct excitation voltage has been set. Too high a voltage can destroy a transducer
5	That each module has a unique address. (see section 3.11)

NOTE: ensure system is switched OFF when removing or replacing modules in rack and ensure each module has a unique address. Failure to do so may cause damage to modules.

1.2 Information on Conformity to EC Directives.

This module is not CE marked because it is intended for use as a component of a larger system. RDP CE mark full modular 600 systems that includes a 6xx housing and a 63x power supply where the system is fully populated with either 600 series amplifier/display modules or blank panels.

If the module is part of a full 600 system, refer to the system manual (CD2010) for CE certification.

If the module is not part of the full 600 system, it is the responsibility of the organization/ individual producing the system to assess and/or test EMC compatibility.

Fig. 1 Front Panel

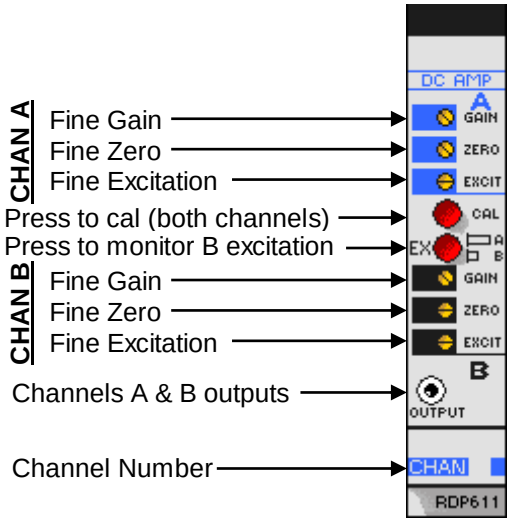

2. CONNECTION DETAILS

2.1 With M600 Backplane

When the 611 is used with the RDP backplane, transducer and output connections are made via circular DIN connectors as follows:

Transducers: 7-pin: Channel A connectors 1A to 15A and Channel B connectors 1B to 15B :-

Transducer Connections			
Connector viewed from rear.	PIN	FUNCTION	
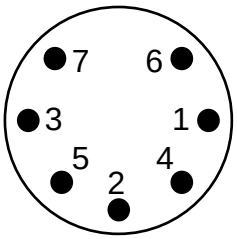	1	Excitation High	
	2	Excitation Low (0V)	
	3	Signal Low – differential input	
	4	Signal High – differential input	
	5	Shield (0V)	
	6	Sense High	Only required for remote sense operation. Refer to section 2.4
	7	Sense Low	

Note: Signal inputs are floating and normally referenced to ground via load cell bridge circuit. If transducer output is floating it may be necessary to connect one of the inputs to ground (0v), e.g. via pin 5.

Outputs: 5-pin Connectors 1C to 15C :-

Output connections with 600 Backplane		
Connector viewed from rear.	PIN	FUNCTION
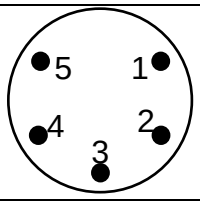	1	Channel A Output
	2	Output Common (0V)
	3	Channel B Output
	4	Isolated Output Common (Optional)
	5	No connection

2.2 Output connections via front panel jack plug.

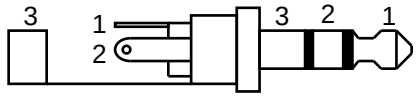

PIN	FUNCTION
1	Channel B Output
2	Channel A Output
3	Output Common (0V)

2.3 Without 600 Backplane

The **DIN 41612** 32-way connector details are:

1	Excitation High		Channel A Transducer
2	Excitation Low (0V)		
3	Signal Low	Differential	
4	Signal High		
5	Shield (0V)		
6	Sense High		
7	Sense Low		
8	Channel A Output		Outputs
9	Output Common (0V)		
10	Channel B Output		
11	Excitation High		Channel B Transducer
12	Excitation Low (0V)		
13	Signal Low	Differential	
14	Signal High		
15	Shield (0V)		
16	Sense High		
17	Sense Low		
18	Channel A Output		Multiplexed for use with 635/636/650 only
19	Channel B Output		
20	Excitation Output		
21	Master/Slave		
22	Output Hold		
23	Limits Reset/Isolated Output 0V		
24/27	Channel Address		Used with 635/636/650 only
28	+5VD		
29	0VD		
30	+15V		
31	-15V		
32	0VA		

2.4 Connections to Strain Gauge Transducers

Without Remote Sense	Remote sense is a facility that measures the excitation voltage at the transducer and compensates for any drop due to long cables etc. For cables longer than 5m use the 'with remote sense' approach detailed below.

The table shows connections for the 7 pin DIN (numbers are the same for channels A and B) and for the 32 way DIN for which channels A and B have different pins. Only use the 32 way connections if the 611 is being used without an RDP housing and backplane.

Ensure that the appropriate links on the PCB are made, Fig. 2 shows locations.

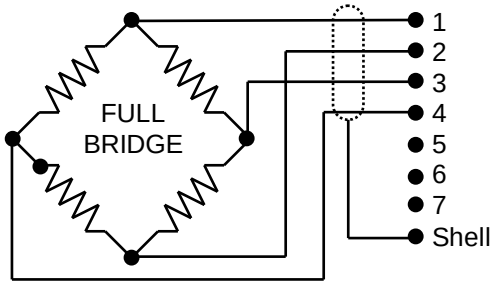

Function	7 PIN DIN	32 way DIN41612	
		CH A	CH B
Excitation +	1	1	11
Exciation -	2	2	12
Signal -	3	3	13
Signal +	4	4	14
0V	No Con	5	15
No Con	6,7	6,7	16,17
Shield	Conector shell	5	15

PCB links necessary	
For channel A	Ensure that J1 (C-D) & (E-F) are made and SP1 and SP2 are made.
For channel B	Ensure that J2 (C-D) & (E-F) are made and SP3 and SP4 are made.

With Remote Sense	Remote sense is a facility that measures the excitation voltage at the transducer and compensates for any drop due to long cables etc.

The table shows connections for the 7 pin DIN (numbers are the same for channels A and B) and for the 32 way DIN for which channels A and B have different pins. Only use the 32 way connections if the 611 is being used without an RDP housing and backplane.

Ensure that the appropriate links on the PCB are made, Fig. 2 shows locations.

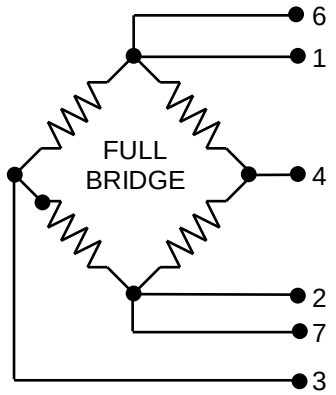

Function	7 PIN DIN	32 way DIN41612	
		CH A	CH B
Excitation +	1	1	11
Exciation -	2	2	12
Signal -	3	3	13
Signal +	4	4	14
0V	No connection	5	15
Sense +	6	6	16
Sense -	7	7	17
Shield	Conector shell	5	15

PCB links necessary	
For channel A	Ensure that J1 (C-D) & (E-F) are made and SP1 and SP2 are removed.
For channel B	Ensure that J2 (C-D) & (E-F) are made and SP3 and SP4 are removed.

2.5 Connections for Amplified Voltage Output Transducers

The example shows a sensor that requires a 15V supply and has a voltage output. As the input to the 611 is floating, the common of the transducer need not be 0V.

*ONLY if the transducer output is FLOATING, connect Signal - to 0V.

Ensure that the appropriate links on the PCB are made, Fig. 2 shows locations.

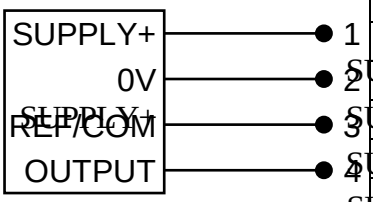

Function	7 PIN DIN	32 way DIN41612	
		CH A	CH B
Excitation +	1	1	11
Exciation -	2	2	12
Signal -*	3	3	13
Signal +	4	4	14
0V	*	*	*
No connection	6,7	6,7	16,17
Shield	Conector shell	5	15
PCB links necessary			
For channel A	Ensure that J1 (A-B) & (E-F) are made and SP1 and SP2 are made.		
For channel B	Ensure that J2 (A-B) & (E-F) are made and SP3 and SP4 are made.		

2.6 Connections for Potentiometric Transducers

The example shows a potentiometric transducer operating from a Voltage supply.
*Set excitation voltage as required.

Ensure that the appropriate links on the PCB are made, Fig. 2 shows locations.

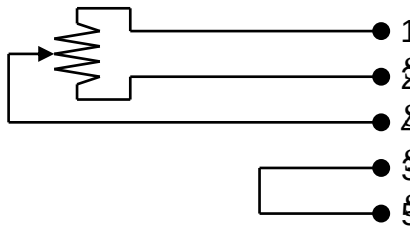

Function	7 PIN DIN	32 way DIN41612	
		CH A	CH B
Excitation +*	1	1	11
Exciation -	2	2	12
Signal -	3	3	13
Signal +	4	4	14
0V	5	5	15
No connection	6,7	6,7	16,17
Shield	Conector shell	5	15
PCB links necessary			
For channel A	Ensure that J1 (C-D) & (E-F) are made and SP1 and SP2 are made.		
For channel B	Ensure that J2 (C-D) & (E-F) are made and SP3 and SP4 are made.		

2.7 Connections for 3 wire 4 to 20mA Transmitters

The example shows a 3 wire 4-20mA transmitter with a 30V supply. Excitation + should be set to +15V and (when J1 is linked as detailed) Excitation - will be -15V (when J1 and J2 are linked as detailed).

Ensure that the appropriate links on the PCB are made, Fig. 2 shows locations.

The resistors should be fitted inside the connector.

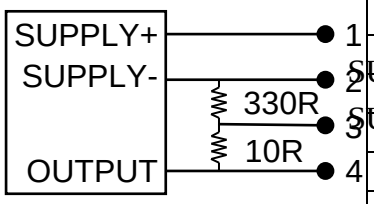

Function	7 PIN DIN	32 way DIN41612	
		CH A	CH B
Excitation +	1	1	11
Exciation -	2	2	12
Signal -	3	3	13
Signal +	4	4	14
0V	N/C	N/C	N/C
No connection	6,7	6,7	16,17
Shield	Conector shell	5	15
PCB links necessary			
For channel A	Ensure that J1 (A-B) & (G-H) are made and SP1 and SP2 are made.		
For channel B	Ensure that J2 (A-B) & (G-H) are made and SP3 and SP4 are made.		

2.8 Connections for 2 wire 4 to 20mA Transmitters

The example shows a 2 wire 4-20mA transmitter with a 30V supply. Excitation + should be set to +15V and Excitation - will be 0V (when J1 and J2 are linked as detailed).

Ensure that the appropriate links on the PCB are made, Fig. 2 shows locations.

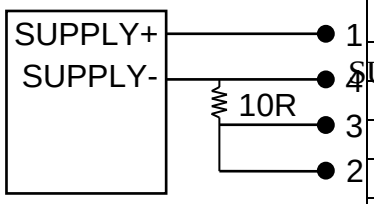

The resistors should be fitted inside the connector.

Function	7 PIN DIN	32 way DIN41612	
		CH A	CH B
Excitation +	1	1	11
Exciation -	2	2	12
Signal -	3	3	13
Signal +	4	4	14
0V	N/C	N/C	N/C
No connection	6,7	6,7	16,17
Shield	Conector shell	5	15
PCB links necessary			
For channel A	Ensure that J1 (A-B) and (E-F) are made and SP1 and SP2 are made.		
For channel B	Ensure that J2 (A-B) and (E-F) are made and SP3 and SP4 are made.		

Fig. 2 Control Locations

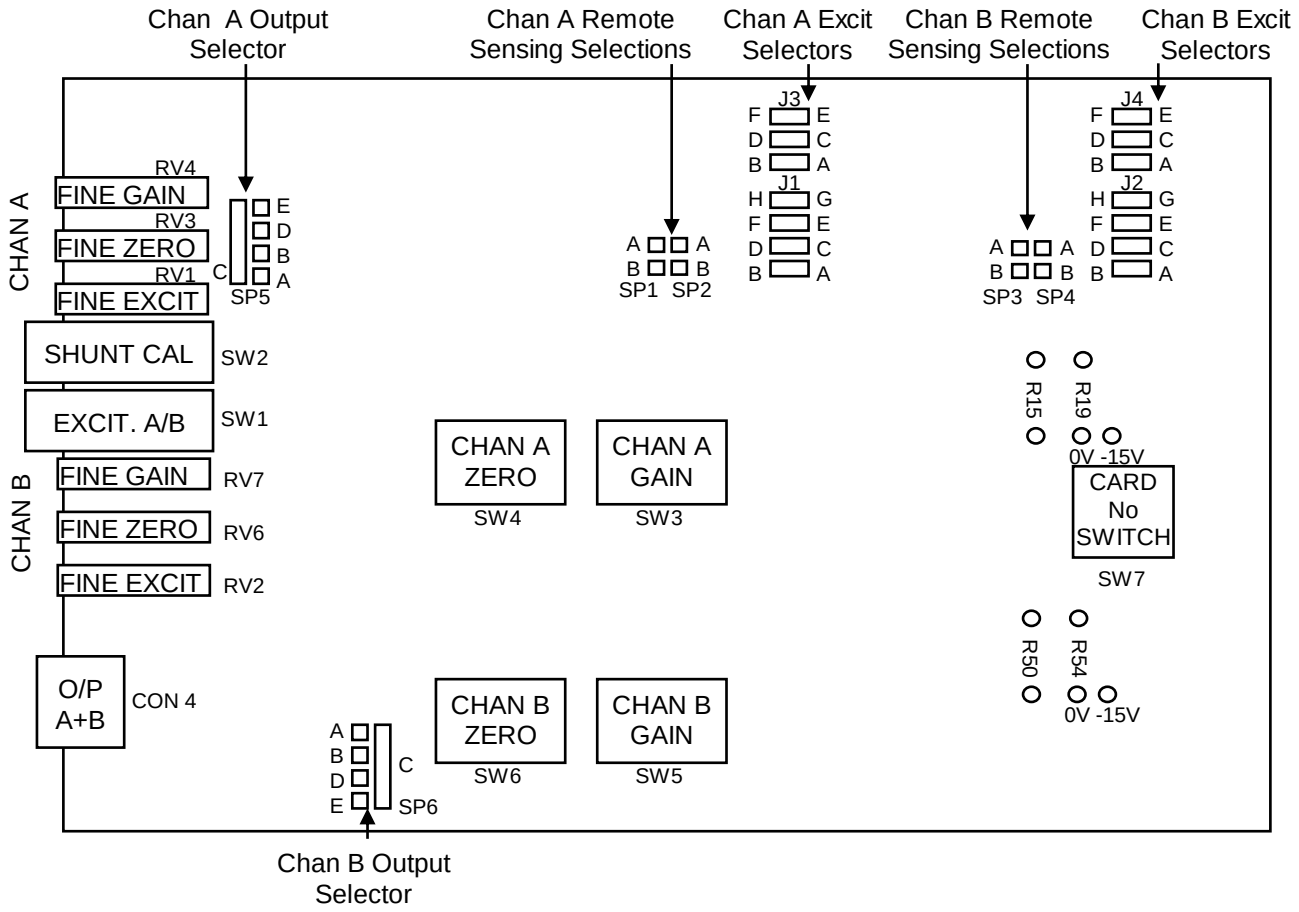

3. CONTROLS

(Refer also to Fig.2 for locations)

3.1 Excitation Voltage

Jumpers J1 (Channel A) and J2 (Channel B) determine whether continuously variable 1-10V (fine adjustment) or fixed ±15V excitation is provided. When these are set for variable excitation the jumpers J3 (A) and J4 (B) select one of three coarse ranges which, with the Fine Excitation potentiometers, cover the range 1-10V as shown below.

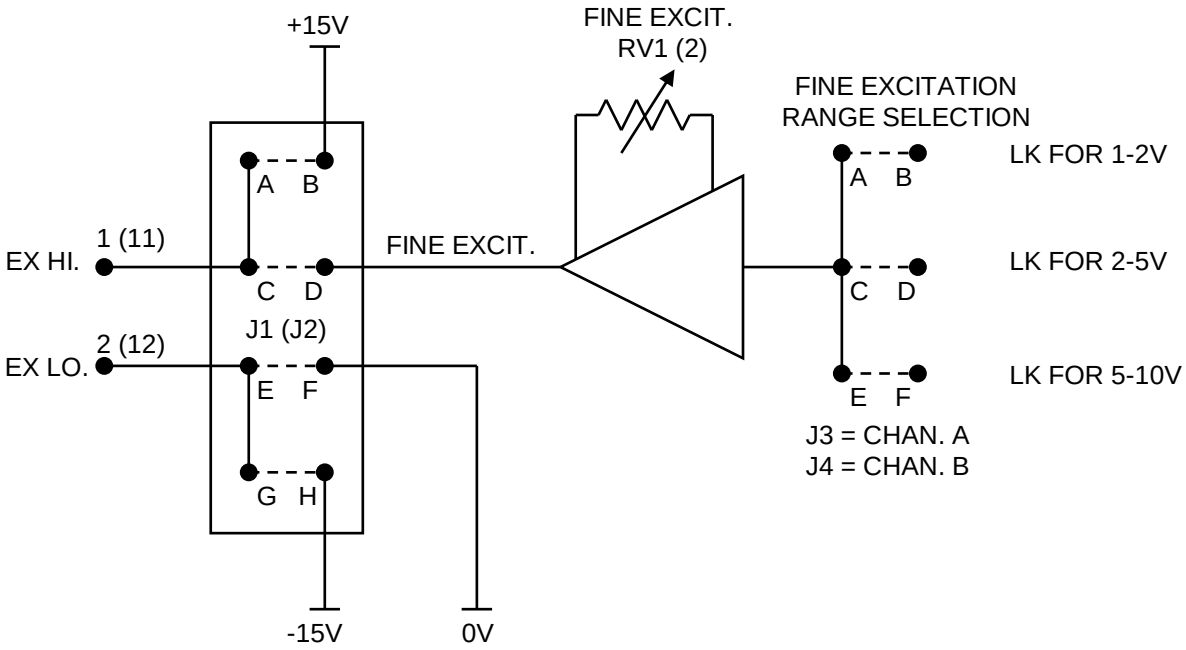

3.2 Excitation Check (SW1)

This pushbutton switch is provided for use with the 635/6 monitor. When the monitor is switched to "Excitation" it displays the excitation voltage of Channel A. Pressing SW1 will cause the monitor to display Channel B excitation voltage.

It is not possible to monitor fixed +15v or -15v excitation in this way.

3.3 Remote Sense Selection

This is made via solder pads SP1, SP2 (Channel A) and SP3, SP4 (Channel B). 611's are normally supplied with these linked for use without remote sense. In this case the sense terminals 6, 7, 16, 17 are not used.

To use the remote sense facility these links must be removed and connections made to the above pins, as shown in section 2.4, via extra cores of the transducer cable.

3.4 Gain Range Switches (SW3 and SW5)

These are 6-way DIL switches which, when used with the fine gain potentiometers, provide 10v or 4-20mA outputs for the input signals listed below:

3.5 Fine Gain Potentiometers (RV4 & RV7)

These are 20-turn, screwdriver adjusted controls providing approximately 2½ : 1 gain range to interpolate between the ranges of the gain switches.

Input Signal Range for ±10V or 4-20mA Output	Switch Toggles ON
5 - 10V (max)	None
2.5 – 5V	6
1.3 – 2.5V	1
0.7 – 1.3V	6 + 1
0.3 – 0.7V	2
0.15 – 0.3V	6 + 2
80 – 150mV	3
40 – 80mV	6 + 3
20 – 40mV	4
10 – 20mV	6 + 4
5 – 10mV	5

3.6 Zero Range Switches (SW4 & SW6)

Toggles 1-5 of these DIL switches are used to apply various amounts of output zero shift or suppression. The amplitude and polarity of the output shift produced by the various toggles is shown below. Note the setting of the fine gain potentiometer affects the amount of shift.

Toggle ON	Approximate Output Shift (Volts)
1	+3
1 + 3	+5
1 + 4	+7
1 + 5	+9
2	-3
2 + 3	-5
2 + 4	-7
2 +5	-9

Note toggle 6 is used as a filter switch - see below.

3.7 Fine Zero Potentiometers (RV3 & RV6)

These are 20-turn, screwdriver adjusted controls providing a small range of output zero adjustment. When used with the Zero Range Switches, they allow suppression of zero over the full ±10v output range (or 4-20mA).

3.8 Output Voltage/Current Selectors

These are solder pads SP5 (Channel A) and SP6 (Channel B) which are normally set to B-C to provide voltage outputs (±10v).

To obtain current outputs, e.g. 4-20mA, then these SPs must be changed to D-C.

Note that the gain and zero controls described above also apply to the current outputs, i.e. the zero controls may be used to set 12mA output to correspond to the mid-point of a bipolar output transducer, and gain controls to set 20mA/4mA output.

3.9 Shunt Calibration Switch (SW2) (for Bridge Transducers)

This is a push-button which, when pressed, connects a precision resistor (usually 59kΩ 0.1%) across one arm of the transducer bridge to provide a calibration check signal.

Note that this two-pole switch operates on both channels simultaneously.

3.10 Filter Switches

Toggle 6 of the Zero Range Switches (SW4 and SW6) when set to ON reduces output noise, and bandwidth, as detailed in the Specification.

3.11 Channel Number (Address) Switch (SW7)

This is a 16-way (hexadecimal), screwdriver-adjusted rotary switch scaled 0 to F. When the module is used in a system with a M600 backplane, the individual channel address number must be set on this switch.

Each module must have a different number set to avoid signal contention on the A, B and E (excitation) output busses to the monitor (635/636/650). **Failure to do so may cause damage to modules.**

For example, if the switch is set to 1 then, when the monitor switch is set to 1, only the outputs of No.1 are enabled and connected to the monitor. Similarly, for numbers 2 - 9. For modules 10 - 15, the switch positions A - F are used, as shown below:

Channel No.	1	2	3	4	5	6	7	8	9	10	11	12	13	14	15
Switch Position.	1	2	3	4	5	6	7	8	9	A	B	C	D	E	F

4. SETTING-UP PROCEDURE

4.1 Unplug the card, if necessary and set excitation, gain, channel number and output voltage/current control as detailed in Section 3.

Note cards are usually supplied with the internal controls set as follows:	
Gain Range:	20-40mV input for ±10V output
Zero Range:	No suppression
Excitation:	5V (variable 1 – 10V)
Remote Sense:	Internally linked
Output V/I:	V (±10V)
Channel Number:	0 (unless installed in rack)

4.2 Connect transducer supply and outputs as detailed in Section 2.

Note, incorrect connection and/or excessive excitation voltage can irreparably damage the transducer.

4.3 With no load/pressure, etc. applied to the transducer, set the output to zero (or 4mA) via the fine zero potentiometer. If necessary, check amplifier zero by disconnecting the transducer signal wires and linking the signal pins to 0V (ground).

4.4 Adjust the fine gain control for the required output signal by either applying a known load/pressure, or by using the shunt calibration method as detailed in Section 5.

Repeat steps 4.3 and 4.4 for consistent results.

5. SHUNT CALIBRATION

Shunt calibration is the term applied to the method of connecting a precision resistor (usually 59K 0.1%) across one arm of a resistance bridge to check or set an amplifier gain, etc. If the excitation voltage and nominal bridge resistance are known, then the resulting signal voltage can be determined. For 10v excitation with a 350 ohm bridge, the signal is about 15mV which is typically half full scale for many transducer types. Two ways of using shunt calibrations are:

5.1 A Calibration Check

If the prime calibration has been made by applying a precisely known load or pressure to the transducer, then the CAL switch may be operated (with load removed) and the display recorded as a calibration check figure. A quick check can then be made at any time by comparing new shunt calibration readings with the original.

Note: If the reading is not at zero when the switch is operated, the true calibration check figure is the shunt calibration reading less the initial reading. If desired, the Fine Gain control may be adjusted (and/or zero) to restore the original display.

5.2 A Secondary Calibration

Using the shunt calibration figure from the Transducer Calibration Certificate, one may use the shunt calibration method to calibrate a system accurately without recourse to known loads or pressures. The procedure is:

(a) Calculate the shunt calibration figure required from the Calibration Certificate

From Transducer Calibration Certificate
Output for 100% = W mV
Output with shunt = Y mV
Therefore the reading required in CAL is:

Y/W x required full scale reading.

Note: If the Calibration Certificate states shunt resistor different from the one fitted (59K ohm is standard: other values to order), then it may still be possible to obtain a calibration from:
CAL fig. calculated x $\frac{\text{R shunt}}{59K}$ = New CAL figure

(b) Connect up transducer. Apply power to the 611 and allow a 30 minute warm-up (for optimum accuracy).
(c) Ensure no load or pressure applied to the transducer.
(d) Operate CAL switch and adjust Fine Gain control to give the required reading as calculated in (a) above.

Note: When using long leads between transducer and amplifier, the shunt calibration resistor should ideally be connected at the transducer end to minimise errors due to lead resistance, e.g. 10m of typical cable can given errors of about 0.5%

6. A-B OR A+B MEASUREMENT

An output signal proportional to A-B may be obtained. The output is between pins 1 and 3 of the 5 pin DIN connector.

An output signal proportional to A+B may be obtained by reversing primary or secondary connections to transducer A or B. The output is between pins 1 and 3 of the 5 pin DIN connector.

7. SPECIFICATION

Number of Channels	2 (A and B) separate excitations and signal amplifiers
Supply	±15V (±1V) unregulated for V output 1% regulation for 4-20mA output No load current ±60mA typical
Transducer Energisation	Jumper-link selectable:- +15V, ±15V fixed 1 to 10V variable Maximum load 110mA per channel, total load 1.8A per system. Remote sense facility.
Excitation Tempco	0.005%/°C
Amplifier: Gain Gain Tempco Zero Adjustment Zero Tempco Input Resistance Input CMV Range CMRR Non-Linearity Bandwidth Noise (V output) (mA output) Output	 X1 to x2000 in 10 ranges 0.003% FS/°C typical (gain = x1000). Optimum at ±10V o/p. ±FS in 8 ranges 0.002% FS/°C typical (gain = x1000) 1GΩ ±13V 110dB (gain = x1000) ±0.05% max. 0.02% typical 200Hz flat (filter OFF) or 10Hz flat (filter ON) 4mV p-p typical (gain = x1000) or 1mV p-p typical with filter ON 15 µA p-p typical (gain = x 1000) or 4 µ A pp typ with filter ON ±10V into 2kΩ (min) or 4-20mA into 0-450Ω. This is an active output that must not be connected to any external power supply as this will damage unit.
Operating Temperature	0°C to 60°C (depending on excitation load)
Dimensions	160 x 100 x 15mm (Eurocard) (6.3 x 4 x 0.6 inches)
Front Panel	128 x 25mm (5 x 1 inches)

8. ISOLATED OUTPUT OPTION

This is an add-on pcb which galvanically isolates the amplifier output signal. Output signal connections are detailed in Section 2, i.e. signals A and B on pins 1 and 3 of the 5-pin backplane connector C, as normal, but the output common signal is now at pin 4 with pin 2 not used.

Note: Channel A and Channel B 0v outputs are commoned internally; there is no isolation between amplifier channels.

Option boards are normally supplied set for ±10v output signals. To use the 4-20mA output, change SP1 and 2 on the option board to B-C. No change is required to the main pcb.

The option board has unity gain (fixed) for voltage outputs so the setting-up procedure is as for normal units. Single-turn potentiometers provide a small adjustment of offset	RV1 set 4mA for channel A
	RV2 set 20mA for channel A
	RV3 set 4mA for channel B

and gain for the 4-20mA outputs as follows:	RV4 set 20mA for channel B

Note: these are normally factory-set so that the normal output to 4-20mA output is:

+10v normal = 20mA
0v normal = 4mA.

8.1 Specification for isolated output option

As for 611 with the following amendments and additions:

Output, current mode	4-20mA into 0-400Ω (lower loop resistance
Isolation voltage Isolation Resistance	500V dc 500MΩ
Output Noise	Has an additional high frequency component (spikes) of typically 20mV rms at 100kHz which could generally be disregarded
Gain (of extra isolation amplifier)	1 : 1 ±0.05% typical
Zero Offset	±20mV typical

9. SAMPLE/HOLD OPTION

This provides a fast, analogue sampling or hold of the 611 output signal. An external TTL signal is applied to the hold input as follows:

Hold Signal High (or open circuit)	Normal operation – output follows transducer signal
Hold Signal Low	HOLD mode – output holds the value extant at the moment of application. Output droops as detailed in the specification.

Note 1: With no connection to the hold line, internal pull-up resistors allow the amplifier to operate normally.

Note 2: TTL signal referred to 0vD pin 29.

For sample/hold operation the following solder links need changing, if not factory-set: Change SP5, SP6 to A-C.

Connections

The hold signal is connected via the 8-pin connector on the rear panel. Pin 1 is hold signal and pin 3 is 0v (common).

Specification

Response Speed	20µ seconds typical
Output Droop	<2mV (0.01% FS) per second typical

Hold Step Error	<0.1% FS typical
TTL Load	10µA maximum plus 47k pull-up per board

10. WARRANTY AND SERVICE

WARRANTY.
R.D.P. Electronics products are warranted against defects in materials or workmanship. This warranty applies for one year from the date of delivery. We will repair or replace products that prove to be defective during the warranty period provided they are returned to R.D.P. Electronics.

This warranty is in lieu of all other warranties, expressed or implied, including the implied warranty of fitness for a particular purpose to the original purchaser or to any other person. R.D.P. Electronics shall not be liable for consequential damages of any kind.

If the instrument is to be returned to R.D.P. Electronics for repair under warranty, it is essential that the type and serial number be quoted, together with full details of any fault.

SERVICE.
We maintain comprehensive after-sales facilities and the instrument can, if necessary be returned to our factory for servicing.

Equipment returned to us for servicing, other than under warranty, must be accompanied by an official order as all repairs and investigations are subject to at least the minimum charge prevailing at the date of return.

The type and serial number of the instrument should always be quoted, together with full details of any fault and services required.

IMPORTANT NOTES.

1. No service work should be undertaken by the customer while the unit is under warranty except with the authorisation of RDP Electronics.

2. If the instrument is to be returned to R.D.P. Electronics for repair, (including repair under warranty) it is essential that it is suitably packed and that carriage is insured and prepaid. R.D.P. Electronics can accept no liability whatsoever for damage sustained during transit.

3. It is regretted that the above warranty only covers repairs carried out at our factory. Should the instrument have been incorporated into other equipment that requires our engineers to perform the repair on site, a charge will be made for the engineer's time to and from the site, plus any expenses incurred.

The aforementioned provisions do not extend the original warranty period of any product that has been either repaired or replaced by R.D.P. Electronics.

THIS WARRANTY MAY BE NULL AND VOID SHOULD THE CUSTOMER FAIL TO MEET OUR TERMS OF PAYMENT.